Data Sheet **PX Thermostat**

General Information

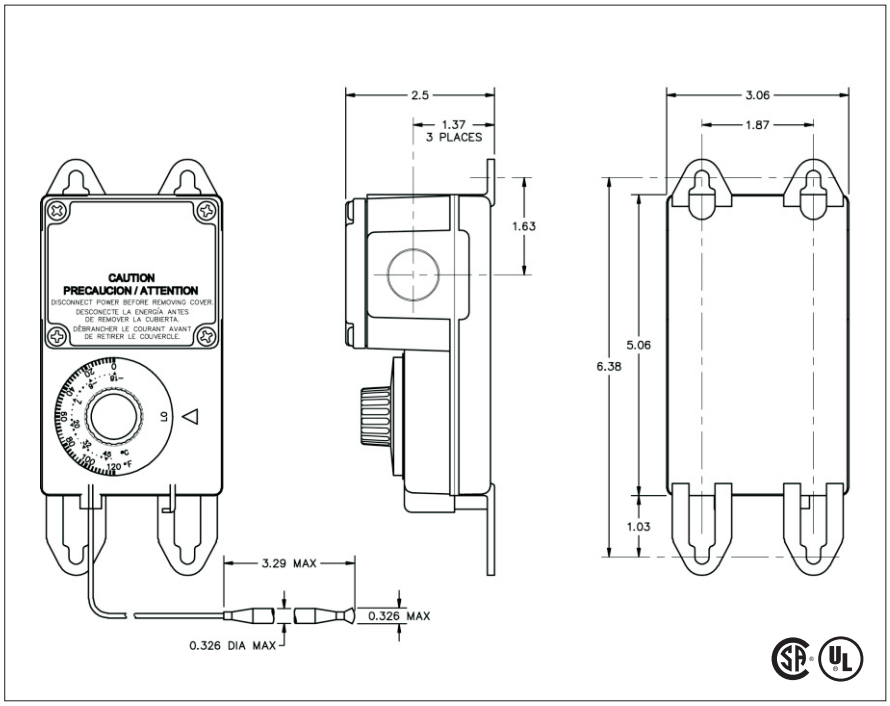

The **PX** thermostat is designed for temperature control applications (pipe freeze protection, roof & gutter deicing or snow melting) in ordinary areas. The unit is housed in a weatherproof NEMA 4X enclosure. The PX thermostat can be used in an ambient-sensing mode or in an a line sensing mode or it can be used to control a contactor coil.

PX Stat Specifications

Voltage:	120-277 V
Max Heating Load:	25A @ 120-240 V , 22A @ 277 V , resistive
Adjustable Temp. Range:	0°F to 120°F (-18°C to 49°C)
Enclosure Type:	NEMA 4X
Mounting:	Wall mounted
Sensor :	5' copper capillary
Max. Exposure Temperature:	140°F (60°C)
Switch:	Single pole, double throw SPDT

Ordering Information

Part No.	Description	Voltage
088L3422	PX Thermostat	120-277

© Copyright 2008 Danfoss Inc.

Data Sheet **PX Thermostat**

Installation

Installation must be made by a trained, qualified service person in accordance with the NEC and all applicable local codes and ordinances.
A drip loop should be provided to prevent water and other liquids from entering the thermostat housing. The cord or conduit connections to the enclosure must be water and dust tight.

Positioning (Ambient)

Locate the thermostat for optimum temperature sensing. Thermostat operation will be affected by unusual heat or cold, such as direct sunlight, near windows or doors etc.

Positioning (Line Sensing)

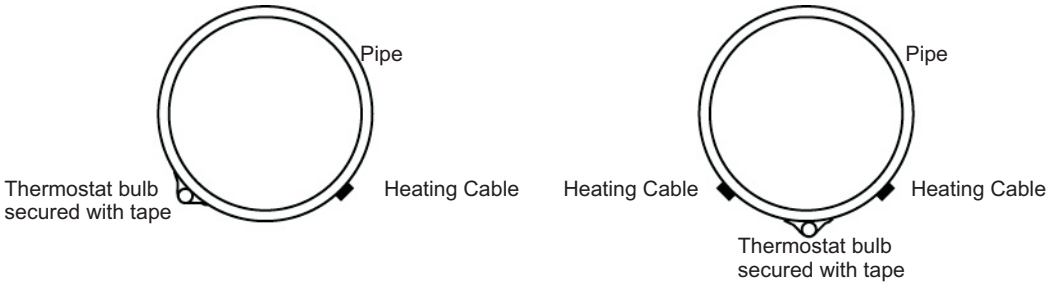

SINGLE TRACED DOUBLE TRACED

Wiring

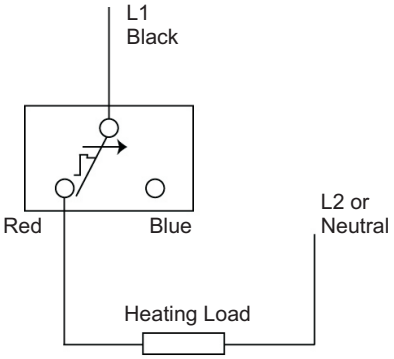

Warranty

2 year comprehensive extended warranty against defects in material, design, and workmanship.

Technical Services

For technical questions, please contact Danfoss Heating Division North America at **1-866-676-8062**, or via the web at **www.DanfossLX.com**

Danfoss can accept no responsibility for possible errors in catalogues, brochures, other printed materials, and website information. Danfoss reserves the right to alter its products without notice. This also applies to products already on order provided that such alteration can be made without subsequent changes being necessary in specifications already agreed upon. All trademarks in this material are property of the respective companies. Danfoss and the Danfoss logotype are registered trademarks of Danfoss A/S. All rights reserved.

Danfoss Inc.
6711 Mississauga Road
Suite 410
Toronto, ON
L5N 2W3
Phone: 905-285-2050
Fax: 905-285-2055
www.DanfossLX.com

Danfoss PX
BRINGING WARMTH TO LIFE

© Copyright 2008 Danfoss Inc.

REV 07.08 Printed in Canada